Duncan Rd.
Segment 5
pole 65 to CVIN connection

LINDEN, CA. 95236

Drawing Index:

T1	Title Sheet
G1	General Notes
C1	General Layout
C2	General Layout
C3	General Layout
C4	General Layout
CD1	Construction Details
CD2	Construction Details
TC1	Traffic Control
TC2	Traffic Control

KEY MAP
N.T.S.

Sagebrush Engineering
1416 Rosemead Ct.
Modesto, Ca. 95350
Calif. License #928419

No.	DATE	BY	DESCRIPTION	APR'VD

Duncan Rd.
Segment 5
Linden, Ca.

SBE JOB NO.:	TBD
DESIGNED BY:	MC
DRAWN BY:	MC
DATE:	Aug. 21, 2012
SCALE:	N/A

SHEET #: T1

GENERAL NOTES

1. ALL MATERIALS AND WORKMANSHIP SHALL CONFORM TO THE CITY'S/COUNTY'S STANDARD DETAILS, TECHNICAL SPECIFICATIONS, AND GENERAL REQUIREMENTS.

2. CONTRACTOR SHALL SECURE A STREET OPENING PERMIT FROM THE CITY ENGINEERING DEPT. AND PAY APPROPRIATE FEE PRIOR TO COMMENCEMENT OF WORK. ALL WORK WITHIN THE PUBLIC RIGHT OF WAY SHALL BE DONE UNDER A SINGLE STREET OPENING PERMIT.

3. IT IS THE CONTRACTORS RESPONSIBILITY TO VERIFY THE LOCATION OF ALL EXISTING UTILITIES WITH THE APPROPRIATE UTILITY AGENCIES PRIOR TO THE COMMENCEMENT OF CONSTRUCTION. CONTRACTOR SHALL NOTIFY ALL PUBLIC & PRIVATE UTILITY OWNERS 48 HOURS PRIOR TO COMMENCEMENT OF WORK ADJACENT TO THE UTILITY. CONTACT UNDERGROUND SERVICE ALERT (USA) AT 800-642-2444.

4. ALL SIDEWALK, CURB, AND GUTTER SHALL BE REMOVED AND REPLACED TO THE NEAREST SCORE MARK OR AS DIRECTED BY THE ENGINEER. INSTALLATION OF NEW SIDEWALK, CURB & GUTTER AGAINST EXISTING IMPROVEMENTS SHALL REQUIRE A SIDEWALK CONTACT JOINT (DOWELS REQUIRED).

5. UNLESS OTHERWISE DIRECTED BY THE CITY/COUNTY ENGINEER IN THE FIELD: AT EACH LOCATION WHERE NEW CURB/GUTTER IS TO BE INSTALLED ON AN EXISTING STREET (DRIVEWAY INSTALLATION, DRIVEWAY ABANDONMENT, CURB RAMP INSTALLATION, CURB FACE DRAINAGE INSTALLATION, ETC.) PAVEMENT RECONSTRUCTION SHALL BE REQUIRED. AN 18" WIDE BAND OF PAVEMENT SHALL BE REMOVED AND REPLACED ALONG THE ENTIRE LENGTH OF CURB/GUTTER INSTALLATION. REMOVAL DEPTH (SAW CUTS REQUIRED) SHALL BE TO THE BASE MATERIAL ON STREETS WITH A.C. OR P.C.C. PAVEMENT FOUR (4) INCHES OR LESS IN THICKNESS. REMOVAL DEPTH SHALL BE TWO INCHES MINIMUM ON STREETS WITH A.C. (GRIND) / P.C.C. (SAW CUT) PAVEMENT THICKNESS GREATER THAN FOUR (4) INCHES. REPLACE WITH A.C. PAVEMENT.

6. BLACK SAND SLURRY SEAL SHALL BE REQUIRED ON ALL NEW STREET PAVEMENT FOR TRENCH WORK, POTHOLES, AND STREET WIDENINGS. SLURRY SEAL SHALL EXTEND 12" BEYOND THE LIMIT OF PAVEMENT RECONSTRUCTION.

7. THE CONTRACTOR SHALL NOTIFY, BY CIRCULAR, ALL BUSINESS ESTABLISHMENTS & RESIDENCES LOCATED IN AREAS AFFECTED BY THE WORK AT LEAST (48) HOURS PRIOR TO START OF CONSTRUCTION. CIRCULAR SHALL BE SUBJECT TO THE APPROVAL OF THE CITY ENGINEER.

8. ALL MANHOLES, VALVE BOXES, MONUMENT BOXES, AND OTHER STRUCTURES IN THE PAVEMENT AREA SHALL BE ADJUSTED TO FINISH GRADE BEFORE PAVING FINAL LIFT.

9. GRADE BREAKS ON CURBS AND SIDEWALKS ARE TO BE ROUNDED OFF ON FORM WORK & FINISHED SURFACING.

10. IT IS THE CONTRACTORS RESPONSIBILITY TO REPLACE ALL STREET MONUMENTS OR LOT CORNER PIPES DISTURBED DURING THE PROCESS OF CONSTRUCTION. IF A STREET MONUMENT HAS THE POTENTIAL OF BEING DISTURBED, A CORNER RECORD SHALL BE FILED WITH MOUNTINVIEW COUNTY SURVEYOR (PER SECTION 8773.2 OF THE PUBLIC LAND SURVEYORS ACT) AS REQUIRED BY THE SUBDIVISION MAP ACT TO PRESERVE THE LOCATION OF SAID STREET MONUMENT. CONTRACTOR SHALL, AT HIS/HER EXPENSE, HIRE A CIVIL ENGINEER OR LAND SURVEYOR TO PERFORM THE WORK.

11. ALL SURPLUS & UNSUITABLE MATERIAL SHALL BE REMOVED FROM PUBLIC RIGHT OF WAY.

12. CONTRACTOR SHALL PROVIDE ADEQUATE DUST CONTROL & KEEP MUD & DEBRIS OFF THE PUBLIC RIGHT OF WAY AT ALL TIMES.

13. ALL TRENCHES & EXCAVATIONS SHALL BE CONSTRUCTED IN STRICT COMPLIANCE WITH THE APPLICABLE SECTIONS OF CALIF. & FEDERAL O.S.H.A. REQUIREMENTS & OTHER APPLICABLE SAFETY ORDINANCES. CONTRACTOR SHALL BEAR FULL RESPONSIBILITY FOR TRENCH SHORING DESIGN & INSTALLATION.

14. EXISTING UTILITIES SHOWN ARE BASED UPON RECORD INFORMATION & ARE APPROXIMATE IN LOCATION & DEPTH. THE CONTRACTOR SHALL POTHOLE ALL EXISTING UTILITIES THAT MAY BE AFFECTED BY NEW FACILITIES IN THIS CONTRACT, VERIFY ACTUAL LOCATION & DEPTH, & REPORT POTENTIAL CONFLICTS TO THE ENGINEER PRIOR TO EXCAVATING FOR NEW FACILITIES.

15. THE CONTRACTOR SHALL POTHOLE ALL EXISTING UTILITIES THAT MAY BE ALLOW HARMFUL POLLUTANTS TO ENTER THE STORM DRAIN SYSTEM. TO ENSURE COMPLIANCE, THE CONTRACTOR SHALL IMPLEMENT THE APPROPRIATE BEST MANAGEMENT PRACTICE (BMP) AS OUTLINED IN THE BROCHURES ENTITLED "BEST MANAGEMENT PRACTICE FOR THE CONSTRUCTION INDUSTRY" ISSUED BY THE MOUNTINVIEW VALLEY NONPOINT SOURCE POLLUTION CONTROL PROGRAM, TO SUIT THE CONSTRUCTION SITE & JOB CONDITION.

16. OVERNIGHT PARKING OF CONSTRUCTION EQUIPMENT IN THE PUBLIC RIGHT OF WAY SHALL NOT BE PERMITTED, EXCEPT AT LOCATION(S) APPROVED BY THE CITY TRAFFIC ENGINEER.

17. UNLESS OTHERWISE NOTED, CLASS 2 A.B. UNDER CURB, GUTTER, & STREET SECTIONS PAVED WITH ASPHALT CONCRETE SHALL BE COMPACTED TO 95% RELATIVE COMPACTION (MINIMUM).

18. ALL TRAFFIC CONTROL DEVICES SHALL BE IN PLACE BEFORE WORK IS STARTED. DEVICES NO LONGER REQUIRED SHALL BE REMOVED AS SOON AS POSSIBLE.

19. PEDESTRIAN TRAFFIC MUST BE MAINTAINED AT ALL TIMES. PEDESTRIANS MAY BE RELOCATED ONTO PRIVATE PROPERTY WITH OWNERS PERMISSION ONLY.

20. NO EQUIPMENT OR MATERIALS SHALL BE STORED OR PERMITTED TO STAND UNPROTECTED WHERE TRAFFIC IS MAINTAINED UNLESS IT IS ALLOWED BY THE CITY ENGINEER IN WRITING.

21. NO EQUIPMENT OR MATERIALS SHALL BE STORED ON ROAD SURFACE DURING NON-WORKING PERIODS UNLESS IT IS ALLOWED BY CITY ENGINEER IN WRITING.

22. NO EQUIPMENT OR MATERIALS SHALL BE STORED ON SIDEWALK AT ANYTIME.

23. EXCAVATION MATERIALS SHALL BE STORED AWAY FROM THE PAVED ROADWAY WHENEVER POSSIBLE. ALL SPILLED MATERIAL IS TO BE REMOVED TO AVOID SLIPPERY CONDITIONS.

24. EXISTING SIGNS, DELINEATIONS, GUARDRAILS, MARKERS, TREES, SHRUBS, FENCES, WALKS, STEPS, ETC. THAT ARE DISTURBED BY THIS CONSTRUCTION SHALL BE REPLACED OR RESTORED TO THEIR ORIGINAL CONDITION OR TO THE SATISFACTION OF THE ADJACENT PROPERTY OWNERS AND THE CITY OF SAN RAFAEL

CONSTRUCTION NOTES

1. THE METHOD OF CONSTRUCTION SHALL BE BY HORIZONTAL BORING UNLESS OTHERWISE APPROVED BY THE CITY/COUNTY.

2. (1) 1.25" SCH40 & (1) FUTURE PATH (7 DUCT) CONDUITS SHALL BE INSTALLED ON ALL OPEN TRENCHING/DIR. BORE UNLESS SHOWN OTHERWISE.

3. EXISTING UTILITIES ARE SHOWN IN APPROXIMATE LOCATIONS ONLY. NOT ALL EXISTING UTILITIES ARE SHOWN ON THIS PLAN. THE CONTRACTOR SHALL FIELD VERIFY DEPTH AND LOCATION OF ALL UTILITIES BY EXPOSING UTILITY CROSSINGS PRIOR TO DIRECTIONAL BORING. THE CONTRACTOR SHALL USE HAND TOOLS AND EXTREME CARE WHEN WORKING IN CLOSE PROXIMITY TO EXISTING UTILITIES.

4. FOR OPEN CUT TRENCHING THE FOLLOWING MINIMUM CLEARANCES SHALL APPLY: A 12" VERTICAL CLEARANCE AT ALL CROSSINGS SHALL BE MAINTAINED BETWEEN PROPOSED CONDUITS AND OTHER EXISTING UTILITIES. A 8' MINIMUM HORIZONTAL CLEARANCE SHALL BE MAINTAINED BETWEEN PROPOSED CONDUITS AND EXISTING SANITARY SEWER AND STORM DRAIN MAINS THAT RUN PARALLEL, UNLESS APPROVED BY THE CITY. THE CONTRACTOR SHALL MAINTAIN A MINIMUM OF 5' HORIZONTAL CLEARANCE FOR ALL OTHER UTILITIES UNLESS OTHERWISE APPROVED BY THE CITY, EXCEPT WHEN AT THE SAME ELEVATION AS WATER MAINS, 8' HORIZONTAL CLEARANCE SHALL BE MAINTAINED UNLESS OTHEWISE APPROVED BY THE CITY. CLEARANCES ALSO APPLY TO FIRE HYDRANTS.

5. THE FOLLOWING MINIMUM CLEARANCES (FROM REAMED PERIMETER OF THE BORE HOLE TO THE OUTER PERIMETER OF THE UTILITY) SHALL BE USED AS A GUIDELINE. THE GEOTECHNICAL REPORT CONCLUSIONS & RECOMMENDATIONS OR THE CITY'S DETERMINATION SHALL BE FOLLOWED, IF MORE RESTRICTIVE.

(A) LOCATE HDD 8 FT. CLEAR (HORIZONTALLY) FROM THE EXISTING STORM DRAIN & SANITARY SEWER MAINS, EXCEPT WHEN AT THE SAME ELEVATION AS WATER MAINS, 8 FT. HORIZONTAL CLEARANCE SHALL BE MAINTAINED. MINIMUM OF 5 FT. HORIZONTAL CLEARANCE SHALL BE MAINTAINED FROM FIRE HYDRANTS, ELECTRICAL CONDUITS, BOXES, & VAULTS.

(B) USE THE FOLLOWING CHART FOR MINIMUM DEPTH OF COVER (IN THE PAVEMENT & SIDEWALK AREAS) & MINIMUM CLEARANCE WHEN CROSSING UTILITIES (STORM DRAIN, SANITARY SEWER, WATER, ELECTRICAL, GAS, ETC.). CROSSING SHALL BE AT 90-DEGREE.

BORE DIAMETER	Min. DEPTH OF COVER	Min. CLEARANCE FROM CROSSING UTILITIES
6" OR LESS	4'	3'
14" OR LESS	6'	5'
24" OR LESS	10'	7'
48" OR LESS	25'	15'

6. AT THE END OF EACH DAY, CONDUIT CAPS SHALL BE PLACED ON ALL VACANT DUCTS. DUCT IN BUILDING ENTRANCES, NEW OR EXISTING SHALL BE SEALED PRIOR AND AFTER PLACEMENT OF FIBER OPTIC CABLE IS COMPLETED, INCLUDING DUCTS ON WALL WHERE CORING IS REQUIRED.

7. THE REMOVAL, STORAGE, AND REPLACEMENT OF ALL SHRUBBERY SHALL BE THE RESPONSIBILITY OF CONTRACTOR. ALL LANDSCAPING SHALL BE RESTORED TO ORIGINAL OR BETTER CONDITIONS.

8. TRAFFIC SIGNAL CIRCUITS AND INTERCONNECT CONDUITS MAY NOT BE SHOWN. CONTRACTOR SHALL LOCATE ALL TRAFFIC SIGNAL CIRCUITS AND INTERCONNECT CONDUITS PRIOR TO ANY TRENCHING OR BORING. PROVIDE 5' SEPARATION BETWEEN NEW CONDUITS AND ALL TRAFFIC SIGNAL AND INTERCONNECT CONDUITS AND 5' FROM ALL TRAFFIC SIGNAL CONTROLLERS AND PULL BOXES. ALL TRAFFIC SIGNAL AND INTERCONNECT CONDUITS SHALL BE MAINTAINED AND PROTECTED. LOOPS OR CONDUITS DAMAGED SHALL BE REPLACED BY THE CONTRACTOR TO CITY/COUNTY SPECIFICATIONS. NOTIFY CITY/COUNTY INSPECTOR IMMEDIATELY AND TRAFFIC DEPARTMENT 48 HOURS PRIOR TO ANY WORK IN THESE AREAS.

9. APPROXIMATE LOCATIONS OF SPLICE BOXES ARE SHOWN ON THE PLANS. EXACT FINAL LOCATION OF SPLICE BOXES SHALL BE DETERMINED IN THE FIELD WITH CITY APPROVAL AFTER ALL EXISTING UTILITIES IN THE AREA OF WORK HAVE BEEN LOCATED.

10. TOPS OF SPLICE BOXES SHALL BE SET FOR FUTURE SIDEWALK INSTALLATION IN SPECIFIED LOCATIONS. ALL SPLICE BOXES SHALL BE PLACED WITH PEDESTRIAN TRAFFIC SAFETY IN MIND UNTIL ALL WORK IS COMPLETE.

11. THE CITY/COUNTY WATER DEPARTMENT SHALL BE NOTIFIED A MINIMUM OF 24 HOURS PRIOR TO POT HOLING ANY CITY WATER OR RECLAIMED WATER MAINS OR SERVICES.

CITY/COUNTY ARBORIST NOTES:

1. NO TRENCHING SHALL BE DONE WITHIN THE DRIPLINE OF EXISTING TREES WITHOUT THE APPROVAL OF THE CITY/COUNTY ARBORIST. OPEN TRENCHING IN THE ROOT ZONE OF A PUBLIC TREE IS PROHIBITED EXCEPT IN CASES WHERE THE TRENCHING FALLS OUTSIDE THE TREE INVOLVED. EXCEPTIONS WILL BE ALLOWED IF, IN THE OPINION OF THE CITY/COUNTY ARBORIST, THE IMPACT OF TRENCHING UPON THE TREE WILL BE NEGLIGIBLE.

2. NO CUTTING OF ANY PART OF CITY/COUNTY TREES, INCLUDING ROOTS SHALL BE DONE WITHOUT SECURING APPROVAL AND DIRECT SUPERVISION FROM THE CITY/COUNTY ARBORIST.

3. NO CUTTING OF ANY PART OF PRIVATE TREES, INCLUDING ROOTS, SHALL BE DONE WITHOUT SECURING SUPERVISION OF A CERTIFIED ARBORIST (CERTIFICATION OF INTERNATIONAL SOCIETY OF ABORICULTURE).

4. BORE OUTSIDE THE DRIPLINE OF ALL TREES TO PREVENT ROOT DAMAGE. NO BORE PITS ARE ALLOWED WITHIN THE DRIPLINE OF ANY EXISTING TREE.

5. TUNNELING: ALL PUBLIC TREES IN EXCESS OF 5" DBH, WHERE THERE IS INSUFFICIENT SPACE TO BYPASS THE DRIPLINE BY TRENCHING, MUST BE TUNNELED. THE BEGINNING/ ENDING DISTANCE OF THE TUNNEL FROM THE FACE OF THE TREE IN ANY DIRECTION IS DETERMINED BY THE DIAMETER OF THE TREE AS SPECIFIED BY THE ACCOMPANYING TABLE:

WHEN THE TREE DIAMETER AT 4.5 FEET IS:	TRENCHING WILL BE REPLACED BY TUNNELING AT THIS MIN. DISTANCE FROM THE FACE OF THE TREE IN ANY DIRECTION:
6"-9"	5 FEET
10"-14"	10 FEET
15"-19"	12 FEET
OVER 19"	15 FEET

DEPTH OF TUNNELING	
TREE DIAMETER	DEPTH OF TUNNEL
9" OR LESS	2.5'
10"-14"	3.0'
15"-19"	3.5'
20" OR MORE	4.0'

LEGEND

CT	PROPOSED NEW CAL-TEL CONDUIT
XO	EXISTING NEXTLINK/XO CONDUIT
BFC	EXISTING BFC CONDUIT
MFS	EXISTING MFS CONDUIT
C	EXISTING CONDUIT(S)
G	EXISTING PG&E NATURAL GAS
N2	EXISTING AIR PRODUCTS NITROGEN MAIN
TGE	EXISTING TELEPHONE, GAS, AND ELECTRIC
GE	EXISTING GAS AND ELECTRIC
RCW	EXISTING RECLAIMED WATER
P2P	EXISTING POINT TO POINT CONDUIT
W	EXISTING WATER
E	EXISTING ELECTRIC
T	EXISTING TELEPHONE
TS	EXISTING TRAFFIC SIGNAL CONDUIT
SL	EXISTING STREET LIGHTING CONDUIT
S	SUBSCRIBER CONDUIT
SS	EXISTING SANITARY SEWER
SD	EXISTING STORM DRAIN
SVP	EXISTING SVP FIBER OPTIC CONDUIT
TSI	TRAFFIC SIGNAL INTERCONNECT
	EXISTING MANHOLE
	EXISTING FIRE HYDRANT
	LIGHT POLE
JP	JOINT POLE
TS	TRAFFIC SIGNAL POLE
	EXIST. TREE
	WATER OR GAS VALVE

ABBREVIATIONS

ACP	ASBESTOS CEMENT PIPE
CB	CATCH BASIN
CIP	CAST IRON PIPE
℄	CENTER LINE
CONC	CONCRETE
CSB	CUSTOMER SPLICE BOX
DSP	DRY STAND PIPE
DWG	DRAWING
E	ELECTRIC
EXIST	EXISTING
FA	FIRE ALARM
FRID	FIRE RATED INNER DUCT
FOC	FACE OF CURB
G	GAS
HDPE	HIGH DENSITY POLYETHYLENE
HV	HIGH VOLTAGE
IC	INNER CONNECT
LV	LOW VOLTAGE
MH	MANHOLE
MIN	MINIMUM
MON	MONUMENT
MPOE	MINIMUM POINT OF ENTRY
NXLK	NEXTLINK
PBSB	PACIFIC BELL SPLICE BOX
PBMH	PACIFIC BELL MANHOLE
PIV	POST INDICATOR VALVE
RCP	REINFORCED CONCRETE PIPE
R.O.W.	RIGHT OF WAY
S	SUBSCRIBER
SB	SPLICE BOX/ SUBSCRIBER BOX
SD	STORM DRAIN
SDMH	STORM DRAIN MANHOLE
SL	STREET LIGHT
SS	SANITARY SEWER
SSMH	SANITARY SEWER MANHOLE
STA	STATION
SVP	SILICON VALLEY POWER
T	TELEPHONE
TS	TRAFFIC SIGNAL
TYP	TYPICAL
VCP	VITRIFIED CLAY PIPE
W	WATER
WM	WATER METER
WV	WATER VALVE

CONTACTS:

CAL-TEL
RICK JENSEN
(209)785-2211 ext. 214
rljensen@caltel.com

SAGEBRUSH ENGINEERING
MIKE CATRON
1416 Rosemead Ct.
Modesto, Ca. 95350
(209)222-7017

Sagebrush Engineering
1416 Rosemead Ct.
Modesto, Ca. 95350
Calif. License #928419

No.	DATE	BY	DESCRIPTION	APRVD

Duncan Rd.
Segment 5
Linden, Ca.

SBE JOB NO.:	TBD
DESIGNED BY:	MC
DRAWN BY:	MC
DATE:	Aug. 21, 2012
SCALE:	N/A

SHEET #: G1

DETAIL A (LOOKING SOUTH)

DETAIL B (LOOKING NORTH)

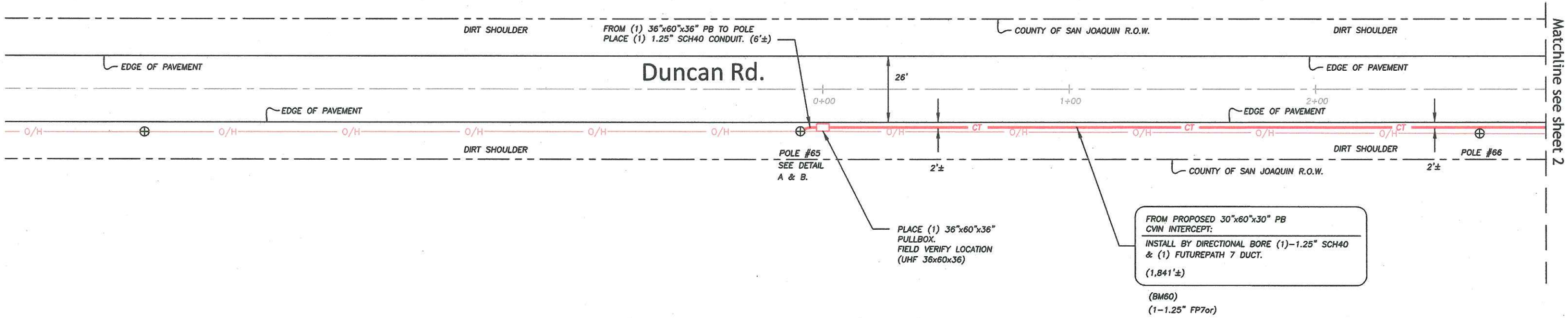

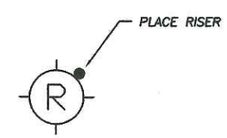

RISER DETAIL
N.T.S.

UNIT	QTY.
BM60	294'
BHF(36x60x36)T	1
UD (1-1.25")	6'
CFO-144I LOOP	100'
CFO-144I	394'

Sagebrush Engineering

1416 Rosemead Ct.
Modesto, Ca. 95350
Calif. License #928419

No.	DATE	BY	DESCRIPTION	APR'VD

Duncan Rd.
Segment 5
Linden, Ca.

SBE JOB NO.: TBD
DESIGNED BY: MC
DRAWN BY: MC
DATE: Aug. 21, 2012
SCALE: 1"=40'

SHEET #: C1

SHEET: 3 OF 10

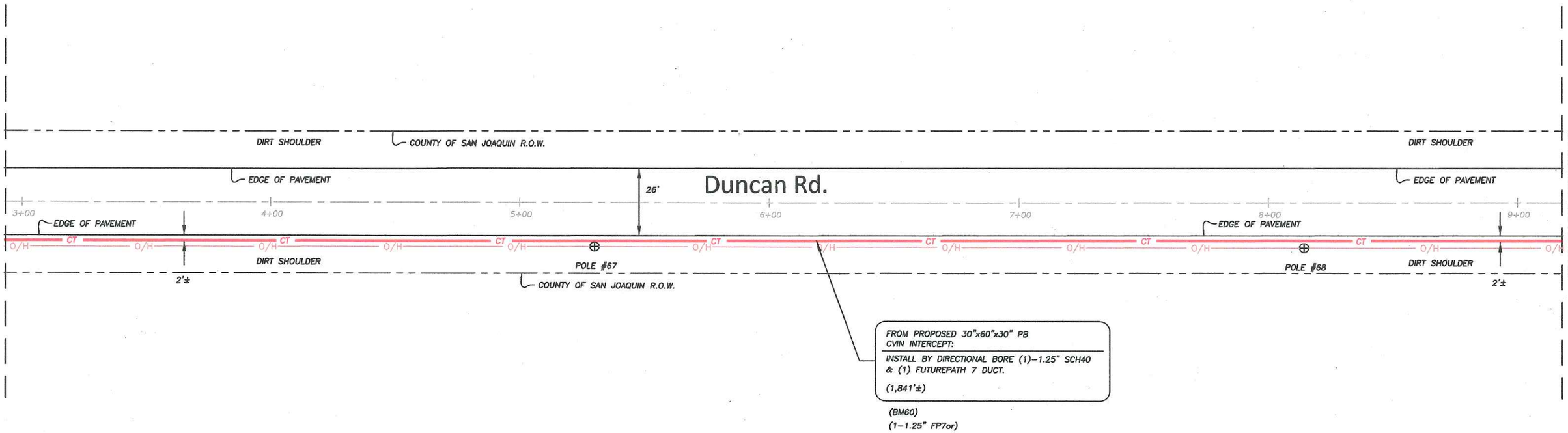

UNIT	QTY.
BM60	625'
CFO-144I	625'

Sagebrush Engineering

1416 Rosemead Ct.
Modesto, Ca. 95350
Calif. License #928419

No.	DATE	BY	DESCRIPTION	APR'VD

Duncan Rd.
Segment 5
Linden, Ca.

SBE JOB NO.: TBD
DESIGNED BY: MC
DRAWN BY: MC
DATE: Aug. 21, 2012
SCALE: 1"=40'

SHEET #: C2

SHEET: 4 OF 10

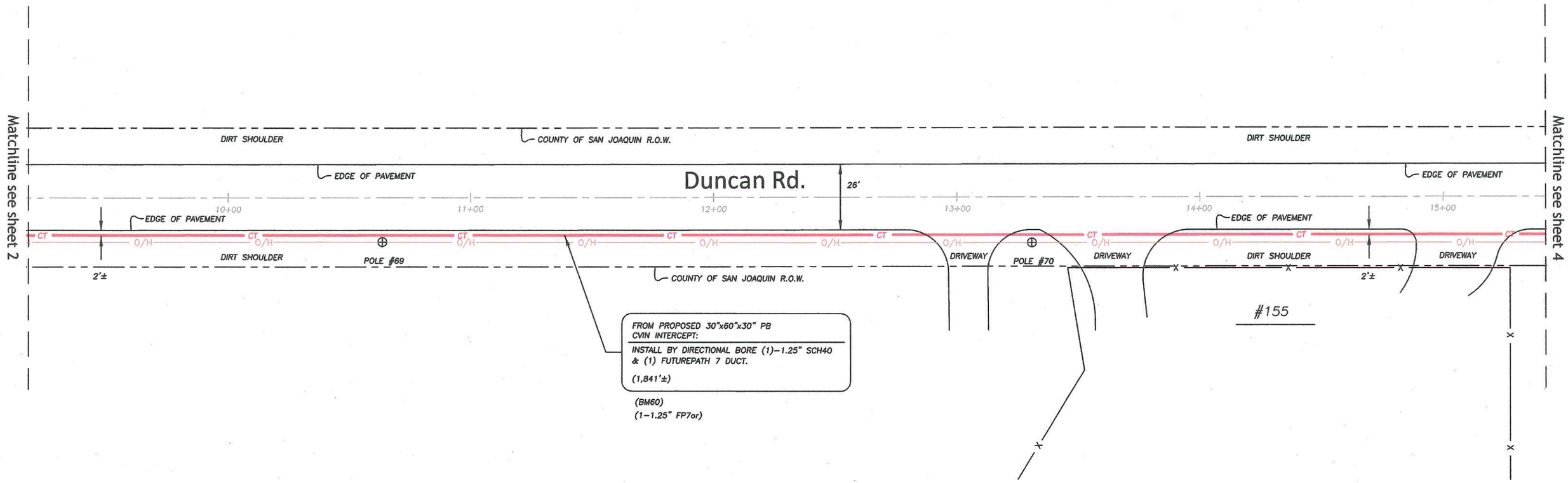

UNIT	QTY.
BM60	625'
CFO-144I	625'

Sagebrush Engineering

1416 Rosemead Ct.
Modesto, Ca. 95350
Calif. License #928419

No.	DATE	BY	DESCRIPTION	APR'VD

Duncan Rd.
Segment 5
Linden, Ca.

SBE JOB NO.: TBD
DESIGNED BY: MC
DRAWN BY: MC
DATE: Aug. 21, 2012
SCALE: 1"=40'

SHEET #: C3

SHEET: 5 OF 10

DETAIL C

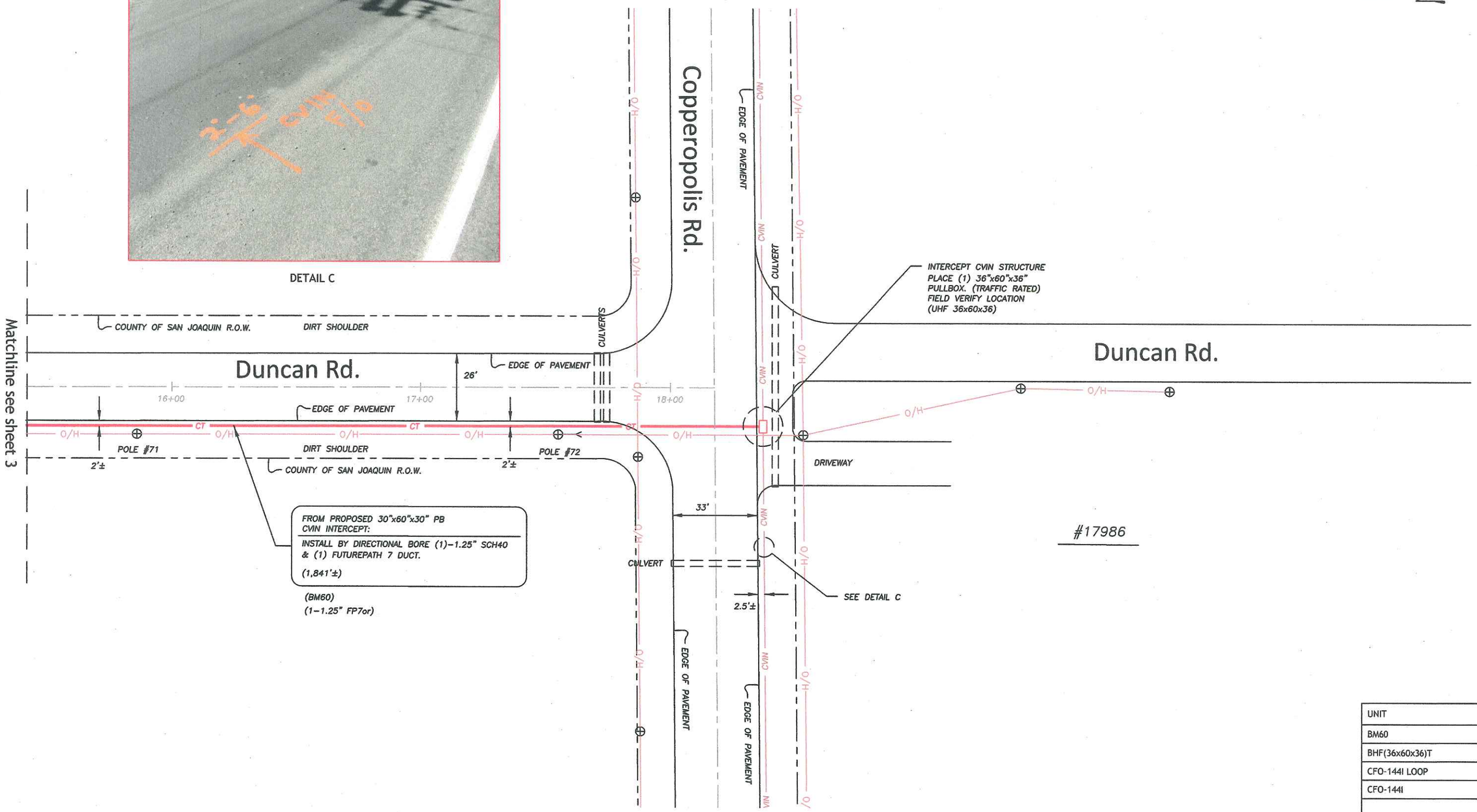

UNIT	QTY.
BM60	297'
BHF(36x60x36)T	1
CFO-144I LOOP	100'
CFO-144I	397'

Cal Tel

Sagebrush Engineering

1416 Rosemead Ct.
Modesto, Ca. 95350
Calif. License #928419

No.	DATE	BY	DESCRIPTION	APR'VD

Duncan Rd.
Segment 5
Linden, Ca.

SBE JOB NO.: TBD
DESIGNED BY: MC
DRAWN BY: MC
DATE: Aug. 21, 2012
SCALE: 1"=40'

SHEET #: C4

SHEET: 6 OF 10

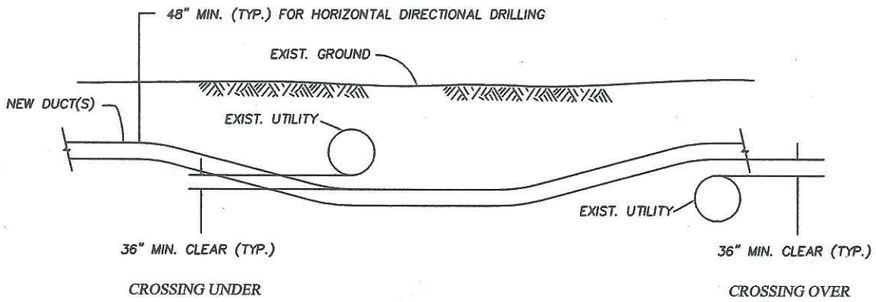

TYPICAL UTILITY CROSSING DETAIL
NO SCALE

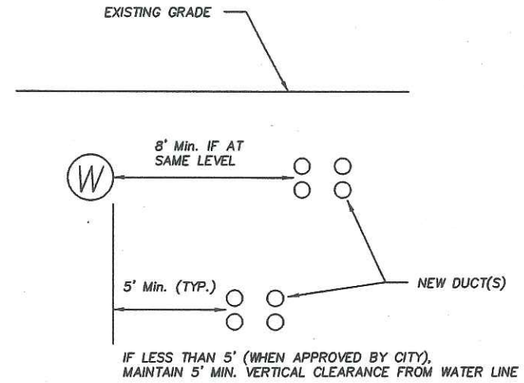

WATER LINE PARALLEL
NO SCALE

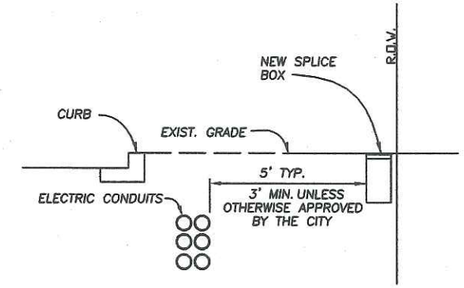

TYPICAL BOX LOCATION DETAIL (NEAR ELEC. UTILITIES)
NO SCALE

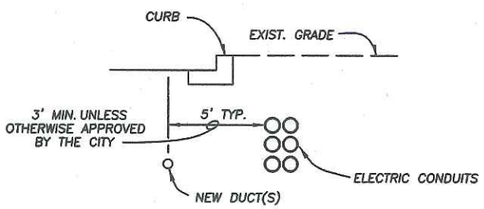

TYPICAL CONDUIT LOCATION DETAIL (NEAR ELEC. UTILITIES)
NO SCALE

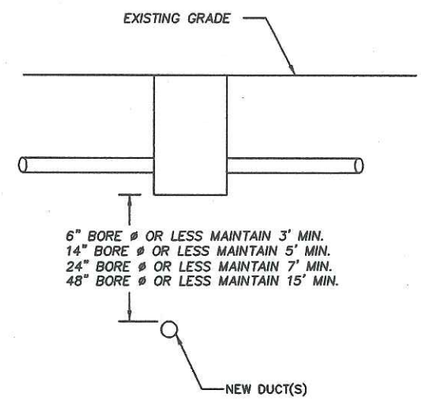

WATER FACILITY AT CROSSING
NO SCALE

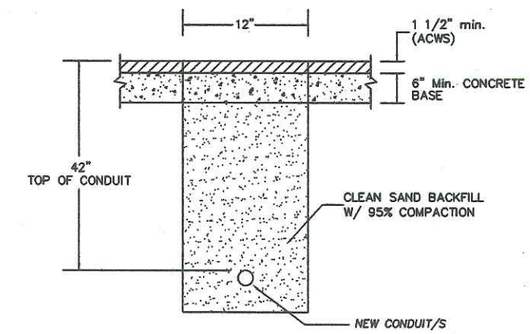

TYPICAL TRENCH DETAIL
N.T.S.

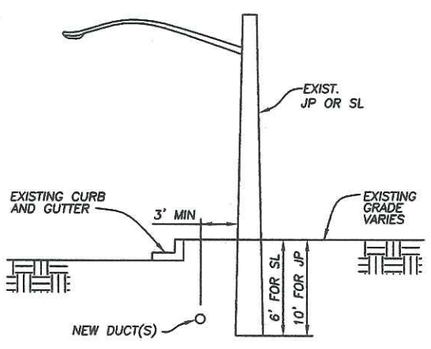

TYPICAL CONDUIT LOCATION (BELOW SL, JP, ETC.)
NO SCALE

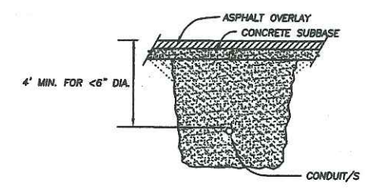

MINIMUM COVER FOR DIRECTIONAL BORE (TYP.)
N.T.S.

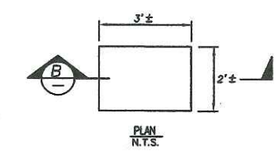

PLAN
N.T.S.

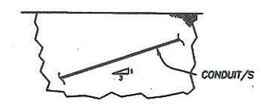

MAXIMUM SLOPE FOR BURIED CONDUIT
N.T.S.

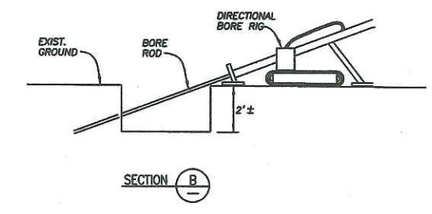

TYPICAL BORE PIT DETAIL
N.T.S.

TYPICAL DIRECTIONAL BORE DETAILS
NO SCALE

Cal Tel

Sagebrush Engineering

1416 Rosemead Ct.
Modesto, Ca. 95350
Calif. License #928419

No.	DATE	BY	DESCRIPTION	APRVD

Duncan Rd.
Segment 5
Linden, Ca.

SBE JOB NO.:	TBD
DESIGNED BY:	MC
DRAWN BY:	MC
DATE:	Aug. 21, 2012
SCALE:	N/A

SHEET #: CD1

SHEET: 7 OF 10

APPROX. WT. = 1275 LBS.

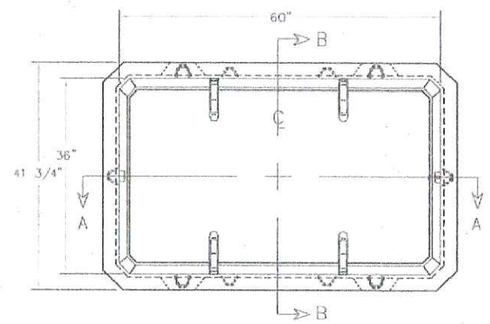

TOP VIEW

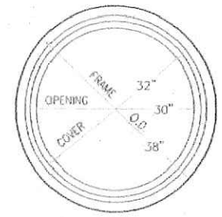

TOP VIEW
CAST IRON FRAME

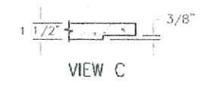

VIEW C

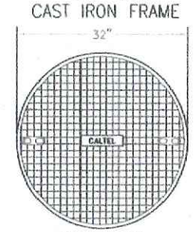

TOP VIEW

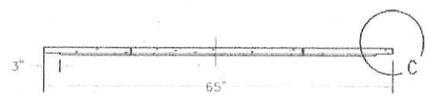

FRONT VIEW – RPM ADAPTOR

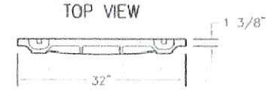

32" C.I. COVER

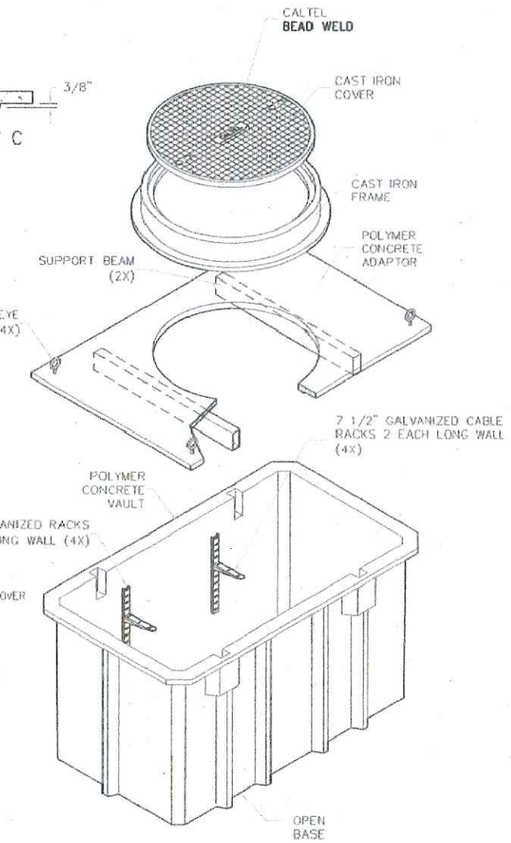

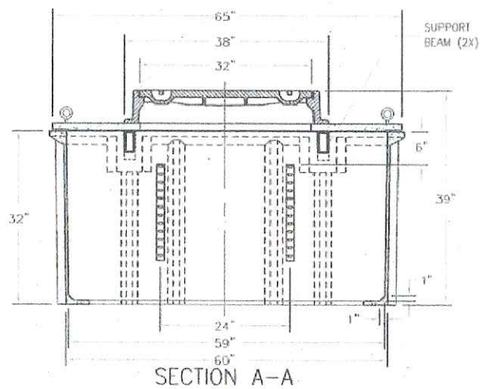

SECTION A–A

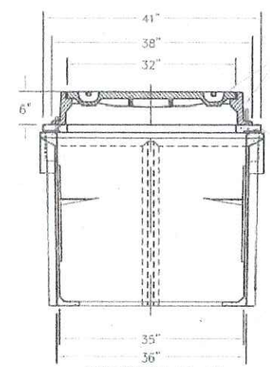

SECTION B–B

FOLLOW SPECIAL INSTALLATION INSTRUCTION

FILE NAME: A6-1833HTAX36-CALTEL

13230 Saticoy Street,
North Hollywood, CA 91605
(818) 982-3600

ARMORCAST PRODUCTS COMPANY

PART DESCRIPTION: 36" X 60" X 36" POLYMER CONCRETE MANHOLE ASSEMBLY W/BASE

CUSTOMER: CALTEL

DRAWN	DATE	SCALE	MAX. LOAD
GL	1/11	NONE	H-20
APRVD WS	1/11	MATERIAL RPM & C.I.	DRAWING NUMBER A6001833HTAX36

"THE INFORMATION IN THIS DRAWING IS CONFIDENTIAL. THE DRAWING IS NOT TO BE REPRODUCED OR ITS CONTENTS DISCLOSED IN ANY WAY WHATSOEVER EXCEPT WITH THE PRIOR WRITTEN APPROVAL OF ARMORCAST PRODUCTS COMPANY. IT IS THE PROPERTY OF AND MUST BE RETURNED TO ARMORCAST PRODUCTS COMPANY, 13230 SATICOY STREET, NORTH HOLLYWOOD, CALIFORNIA 91605."

Cal Tel

Sagebrush Engineering

1416 Rosemead Ct.
Modesto, Ca. 95350
Calif. License #928419

No.	DATE	BY	DESCRIPTION	APRVD

Duncan Rd.
Segment 5
Linden, Ca.

SBE JOB NO.:	TBD
DESIGNED BY:	MC
DRAWN BY:	MC
DATE:	Aug. 21, 2012
SCALE:	N/A

SHEET #: CD2

SHEET: 8 OF 10

WARNING SIGNS AND GUIDE SIGNS

B1

(W20–1)

(W20–2)

(W20–3)

(W20–4)

B2

(W21–1A)

(C30)

(C9)A (CA)

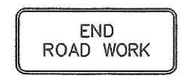

(G20–2)

B3

(W20–4)

(C20)(CA)/C20A(CA)

(W1–4)

(W21–5)

(W1–6)

(R3–1)

(R3–2)

(C2)(CA)

WARNING SIGNS

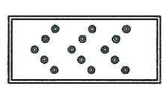
FLASHING ARROW SIGN

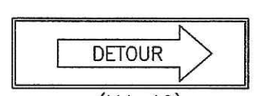

(M4–10)

(M4–8/M4–8a/
M4–9/SC3(CA)

GUIDE SIGNS

SYMBOLS AND LEGENDS

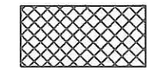
WORK AREA

TRAFFIC SIGNS (ARROW DIRECTION INDICATES SIGN ORIENTATION)

CHANNELIZING DEVICES (TRAFFIC CONES, DELINEATOR POSTS, VERTICAL PANELS, ETC.)

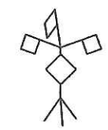
HIGH LEVEL WARNING DEVICE

FLAGGER (COUNTERMANDING TRAFFIC SIGNALS REQUIRES OFF–DUTY LAW ENFORCEMENT OFFICER)

SURVEY RODMAN

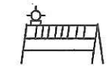
BARRICADES

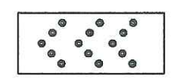
FLASHING ARROW SIGN

NOTES :

1. ALL WORK SHALL BE DONE IN CONFORMACE WITH THE LATEST EDITION OF THE "WATCH MANUAL" & "MUTCD" – CALIFORNIA
2. FOR NIGHT TIME USAGE, REFER TO "WARNING LIGHT APPLICATIONS DURING NIGHT TIME OPERATIONS"
3. ADDITIONAL TEMPORARY TRAFFIC CONTROL DEVICES (SEQUENTIAL ARROWS, BARRICADES, STEEL PLATES) MAY BE REQUIRED.
4. ALL LIGHT BOARDS & LIGHTED SIGNAGE TO BE SOLAR POWERED
5. DEVICES PER "MUTCD" – CALIFORNIA
6. TRAFFIC CONTROL REQUIRED AT ALL WORK LOCATION IN STREET INCLUDING BORE PITS, POT HOLES AND EXCAVATION/TRENCHES.
7. All signs and sign placement per Current CA MUTCD.

NOTE: POST R9–11A OR R9–3A SIGNS IF SIDEWALK IS RESTRICTED.

Cal Tel

Sagebrush Engineering

1416 Rosemead Ct.
Modesto, Ca. 95350
Calif. License #928419

No.	DATE	BY	DESCRIPTION	APRVD

Duncan Rd.
Segment 5
Linden, Ca.

SBE JOB NO.: TBD
DESIGNED BY: MC
DRAWN BY: MC
DATE: Aug. 21, 2012
SCALE: N/A

SHEET #: TC1

SHEET: 9 OF 10

SHOULDER CLOSURE

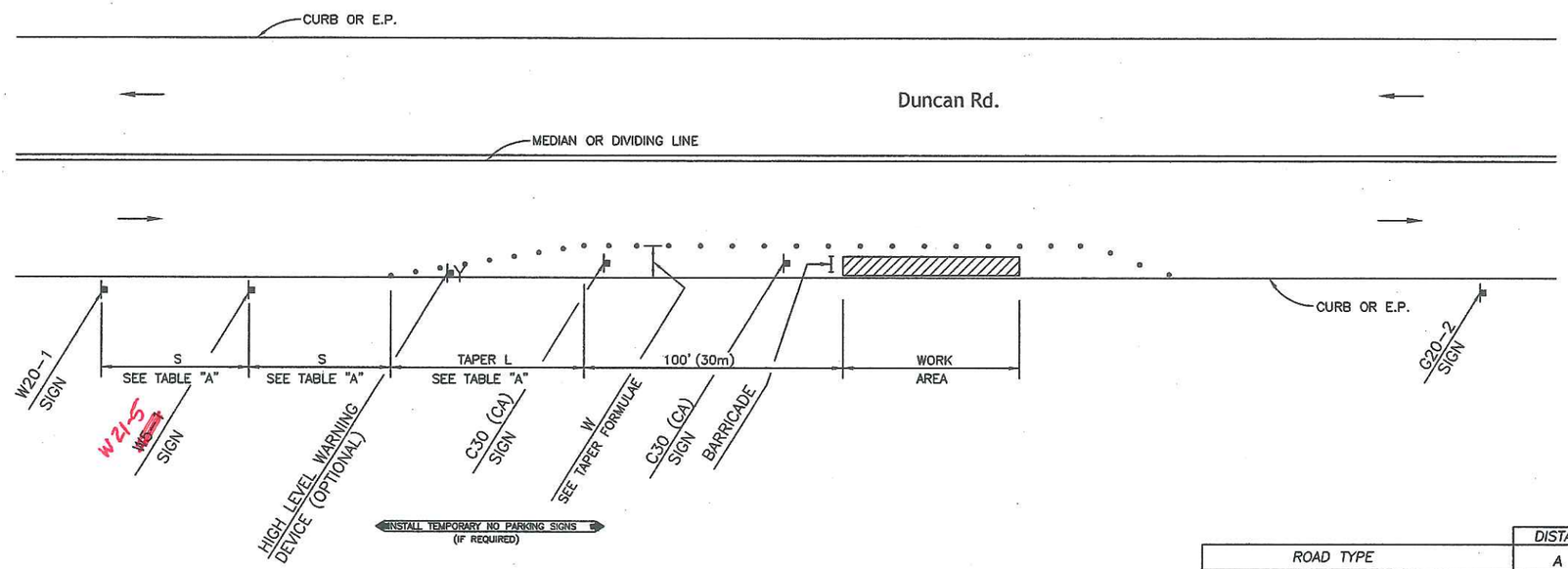

ROAD TYPE	DISTANCE BETWEEN SIGNS A	B	C
URBAN(LOW SPEED) 25 MPH OR LESS	100'	100'	100'
URBAN(HIGH SPEED) 30MPH OR MORE	350'	350'	350'
RURAL	500'	500'	500'
EXPRESSWAY/FREEWAY	1,000	1,500'	2.640'

MINIMUM TAPER LENGTH(FOR 12' LANES)				
MPH	MERGING L	SHIFTING	SHOULDER	DOWN STREAM
20 MPH	80'	40'	27'	100'
25 MPH	125'	63'	42'	100'
30 MPH	180'	90'	60'	100'
35 MPH	245'	123'	82'	100'
40 MPH	320'	160'	107'	100'
45 MPH	540'	270'	180'	100'
50 MPH	600'	300'	200'	100'
55 MPH	660'	330'	220'	100'
60 MPH	720'	360'	240'	100'
65 MPH	780'	390'	260'	100'
70 MPH	840'	420'	280'	100'

Cal Tel

Sagebrush Engineering

1416 Rosemead Ct.
Modesto, Ca. 95350
Calif. License #928419

No.	DATE	BY	DESCRIPTION	APR'VD

Duncan Rd.
Segment 5
Linden, Ca.

SBE JOB NO.: TBD
DESIGNED BY: MC
DRAWN BY: MC
DATE: Aug. 21, 2012
SCALE: N/A

SHEET #: TC2

SHEET: 10 OF 10